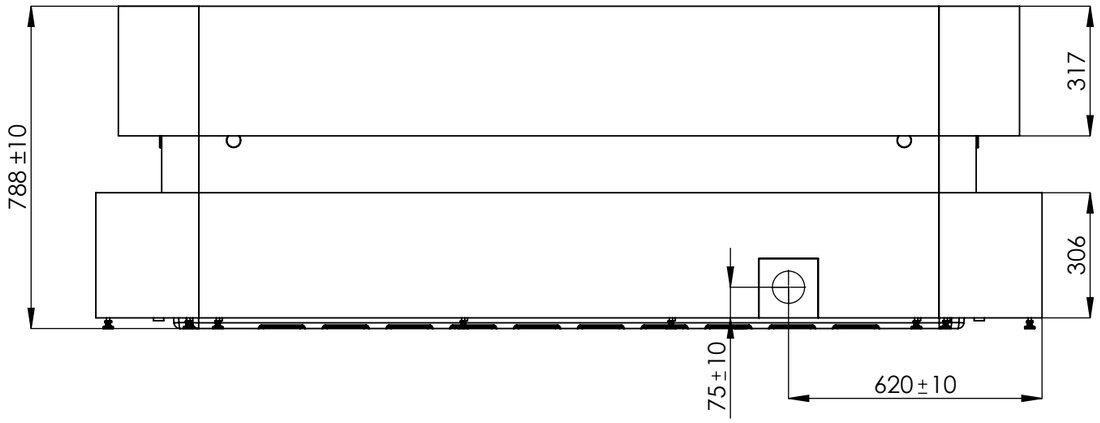

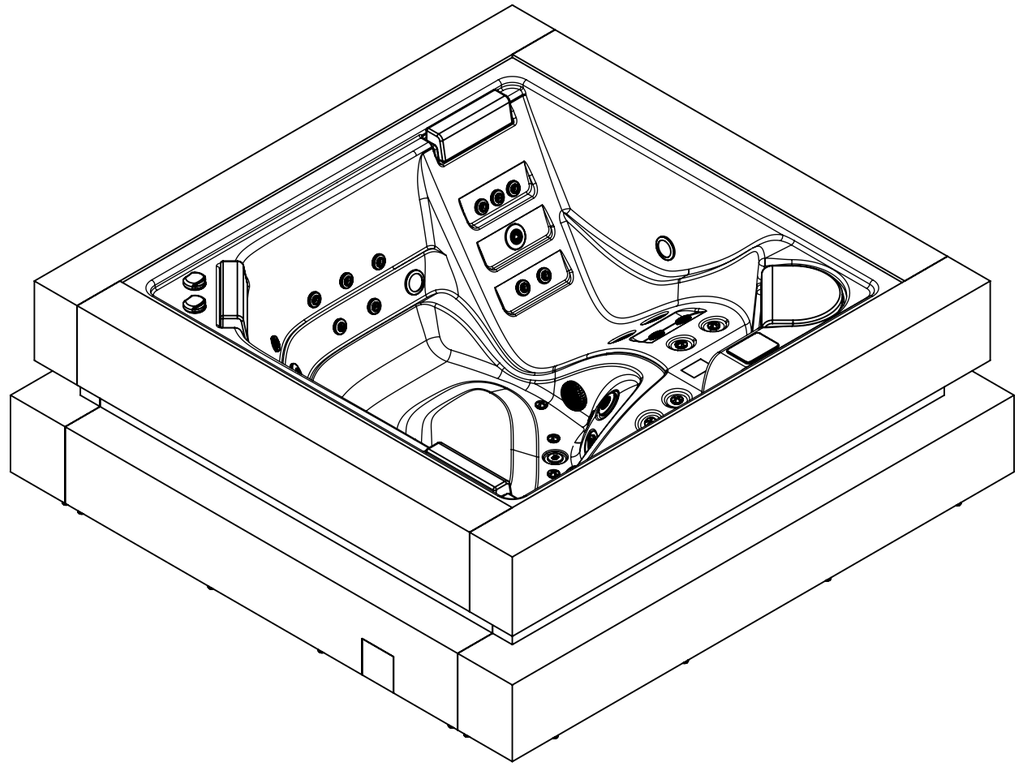

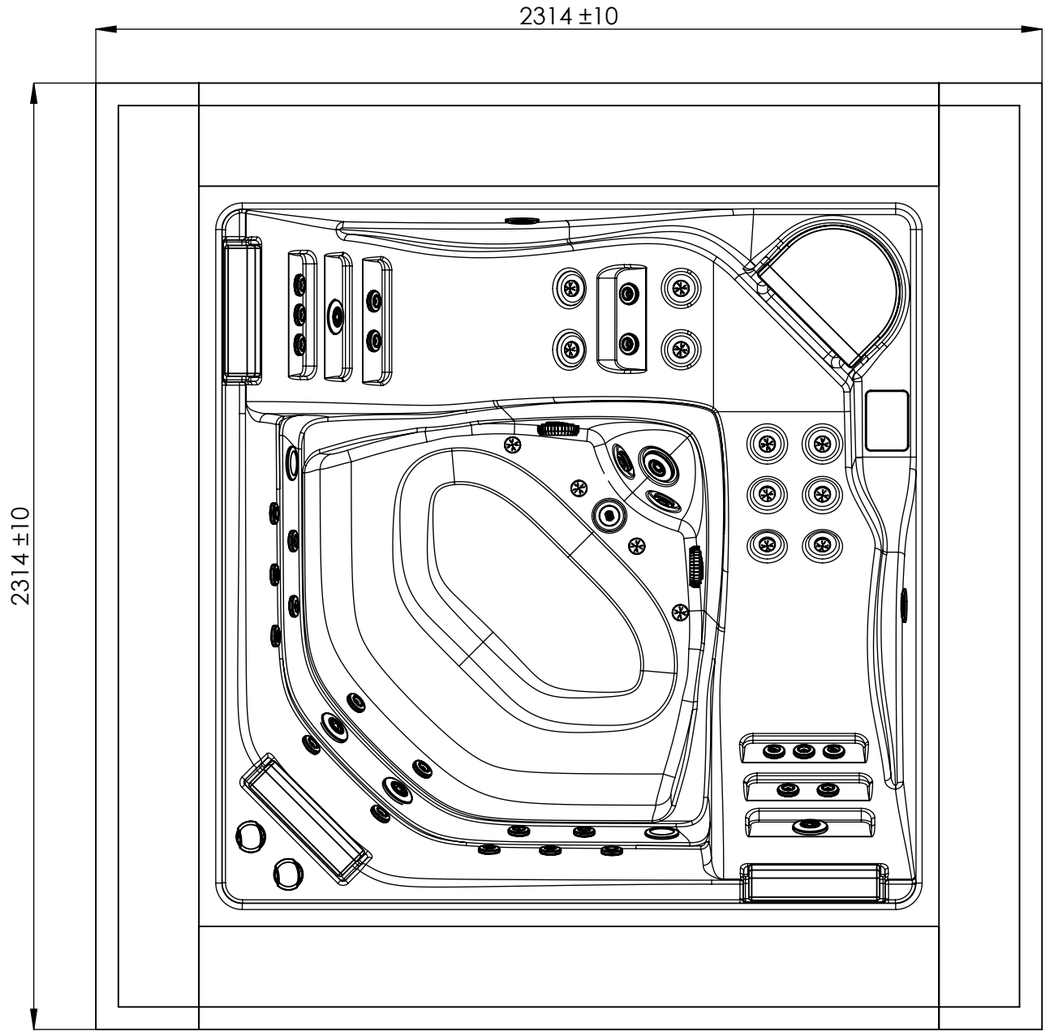

ELECTRICAL BOARD CONNECTIONS ACCESS

DRAIN SIDE

WARNING:
It's essential to keep a minimum clearance access of **700mm** all around.

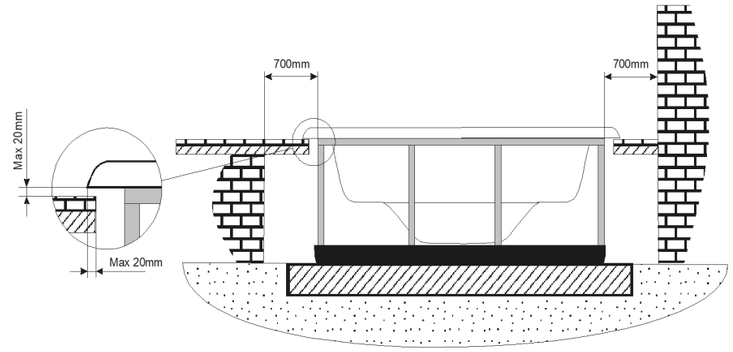

According to our policy of continuous improvement, dimensions, features or components of this product can be partially or completely changedwithout prior notice.
It's Customer responsibility to verify that this is the last version of the drawing

Revision *Revisión*	Date *Fecha*	Name *Nombre*	Modification *Modificación*

Dimensions in mm. General Tolerances +/- 10mm

COMMERCIAL

	Date	Name
Drawn	04/01/2022	CF
Checked	04/01/2022	Xavi Codina
Scale 1:15	General Tolerance DIN 7168 ISO 2768g	
Sheet 1/1		

iberspa

Code: 75384

Rev.: 00

Size A3

First Angle Projection

Property of IBERSPA S.L. Avda. Plà d'Urgell 2-8 25200 Cervera, Spain. Don't use without permission. Keep this information confidential and use it solely for the permitted purpose.